Seismic Strengthening of Soft-Story RC Moment Frames

Wongsa Wararuksajja[1] Sutat Leelataviwat[1,*] Pennung Warnitchai[2] Li Bing[3], Hasan Tariq[4] and Nattakan Naiyana[1]

[1] *King Mongkut's University of Technology Thonburi, THAILAND*
[2] *Asian Institute of Technology, Thailand, THAILAND*
[3] *Nanyang Technological University, Singapore*
[4] *New Jersey Institute of Technology, Newark, USA*
**Corresponding author; E-mail address: sutat.lee@kmutt.ac.th*

Abstract

)
(
)
)
)
)
(
)
( )
)
)
( )
)
:

1. Introduction

).
- , / ( )
)
)
)
)
)
)
)
)

2. Details of Prototype Frames

(
)
)
(
)
)
) ,)

3. Retrofitting Design

3.1 Strengthening with Buckling Restrained Braces

(, (/)

/ (,

(

))

((

( ) //

( )

/)

(((

(

))

δ_t

)

$$\delta_t = C_0 C_1 C_2 C_3 S_a \frac{T_e^2}{4\pi^2} g$$,

)

C_0

C_1

(

(C_2

(

$C_2 = \Delta\Delta_{EPP}$ C_3

(T_e S_a

g)

(

Fig. 1)

) - , / /

( )

)

/ (-

R) (

) -) - /

)

/)

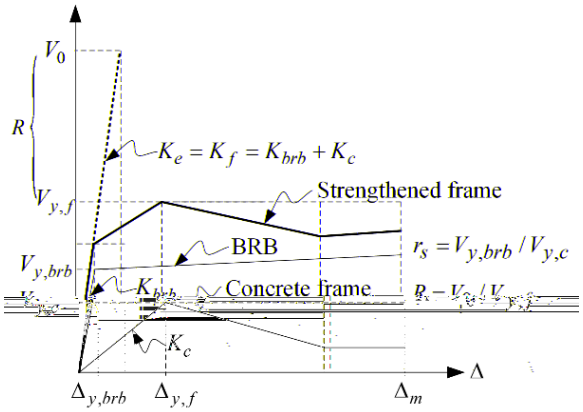

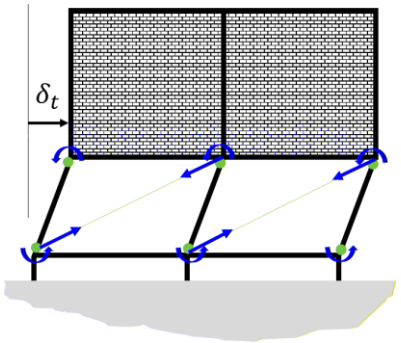

$$V_{y,f} = \sum \frac{M_{pc}}{h_c} + \sum P_y \cos(\theta)$$

$$r_s = \sum P_y \cos(\theta) / \sum \frac{M_{pc}}{h_c}$$

Fig. 2 /)

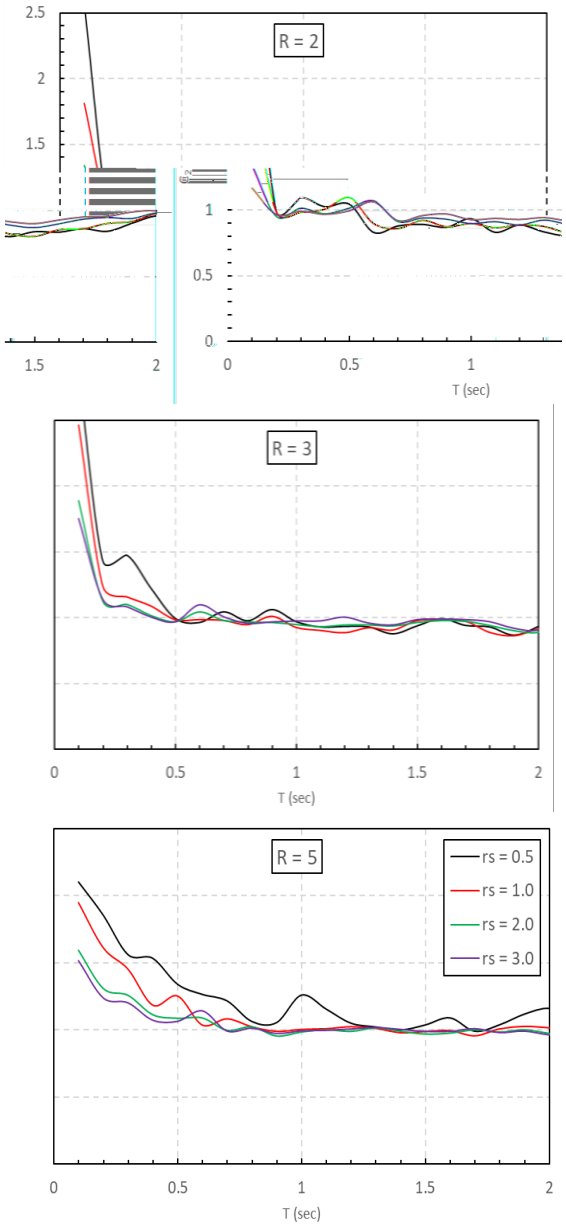

Fig. 3 -

// - ,)

C_2).)

/ ,)

)

C_2

)

)

C_2 ,)

)

)

C_2

,)

)

( )

,

-

)) /)

/ (.

)



Fig. 4)

3.2 Strengthening with Concrete Jacketing

)

)

)

C_2

)

- /)

))

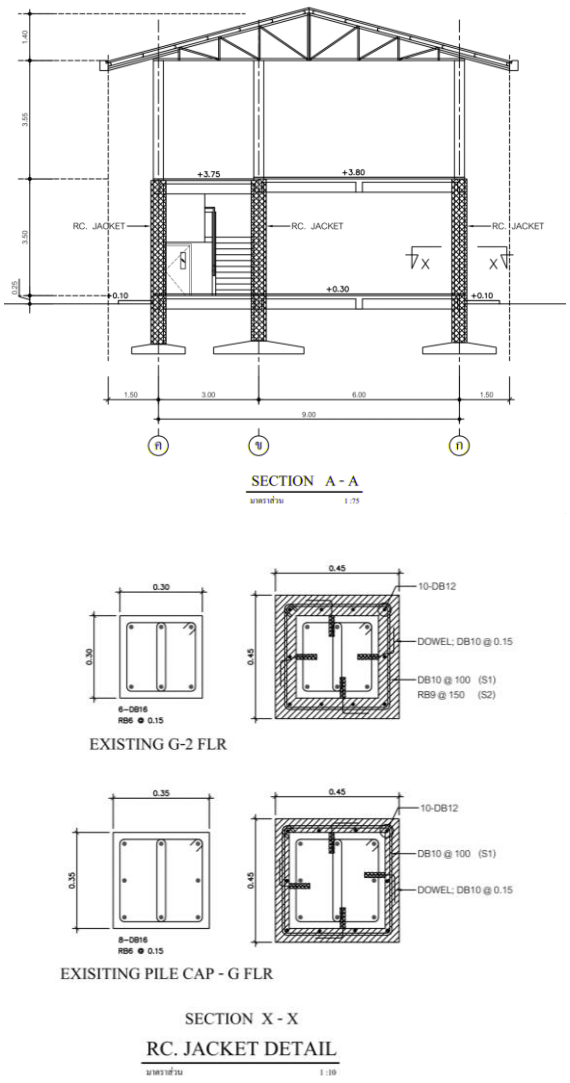



Fig. 5)

4. Response Analysis

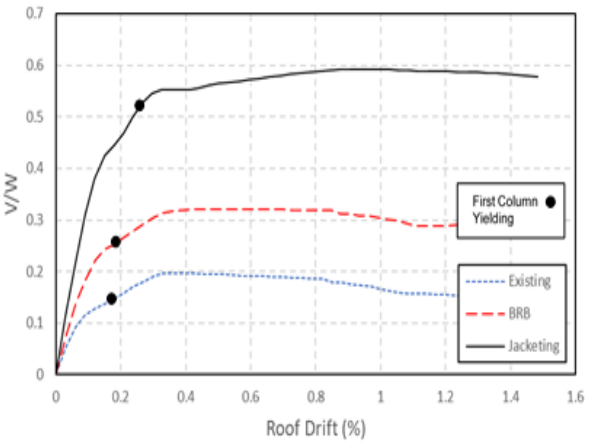

Fig. 7

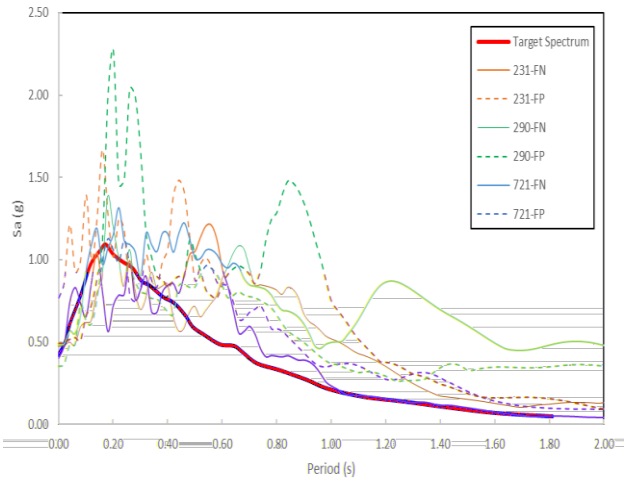

Fig. 6

References

,)))))

Fig. 8)

.)))) - ,
((

).- , . , /)
/)))
) - ,/ (
(
(
) , ,, (,--)
)) - ,
(
(

)
) -) . /))
))
(//)-)
)
))